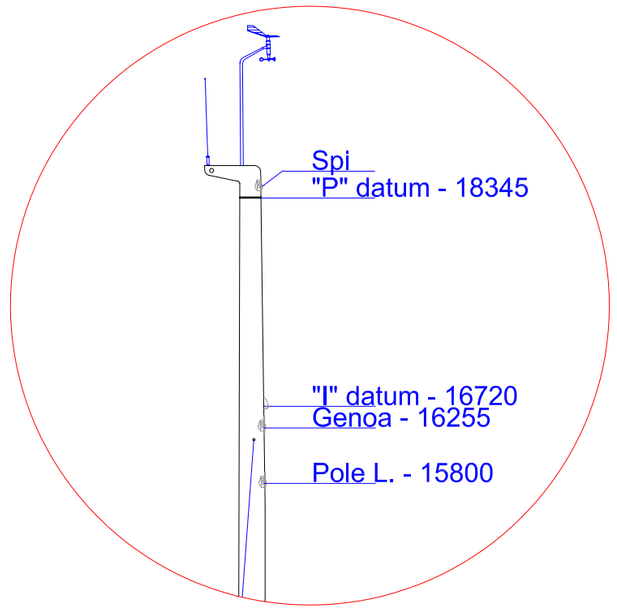


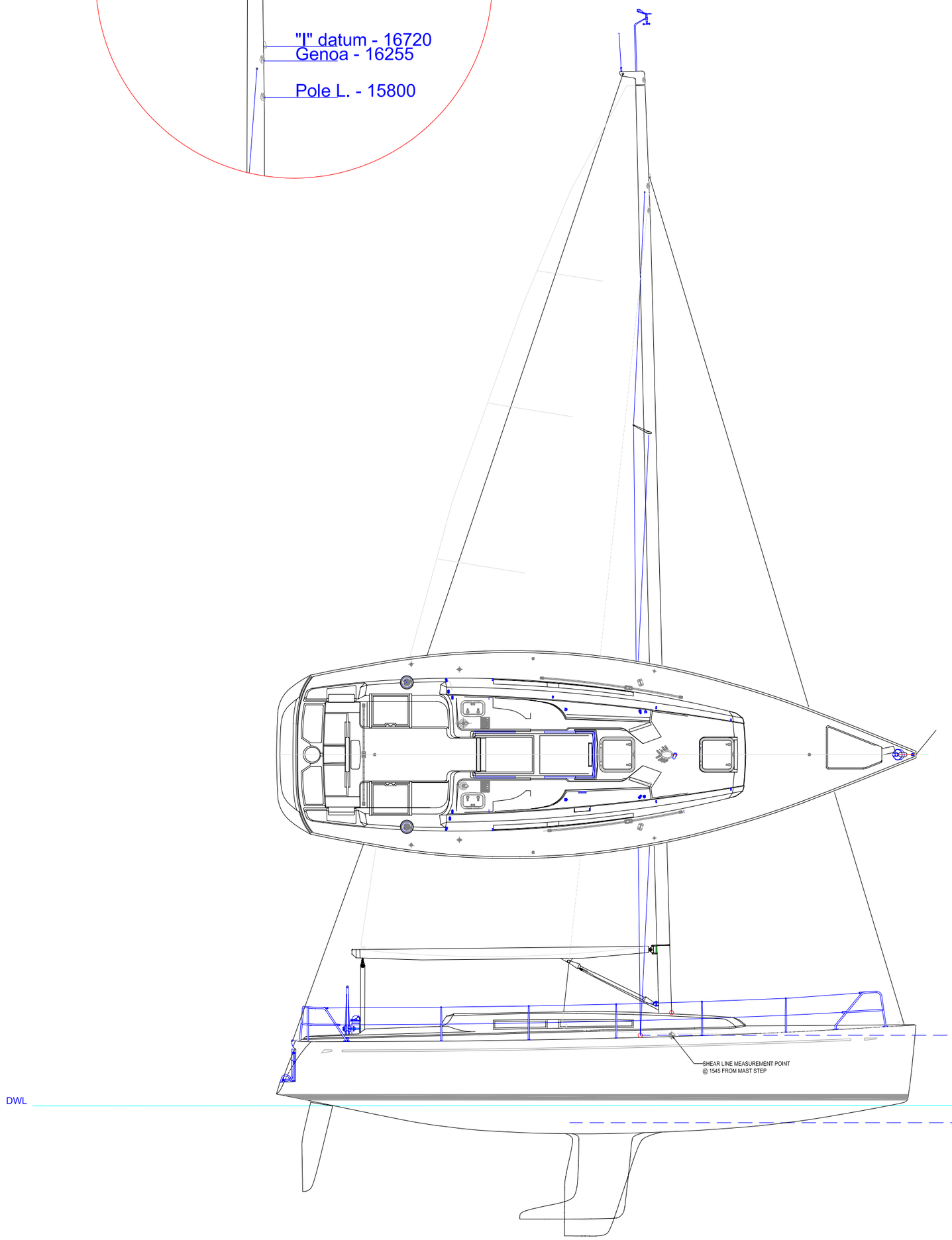


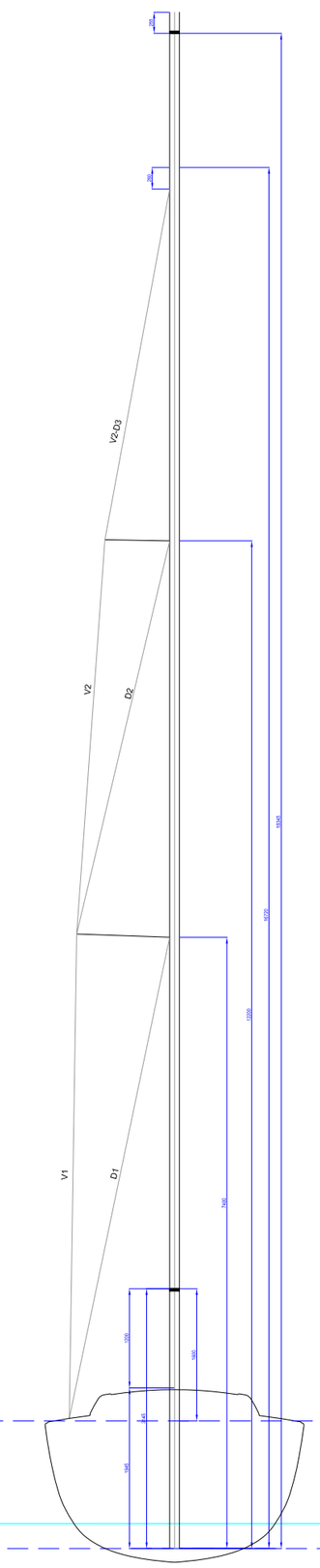


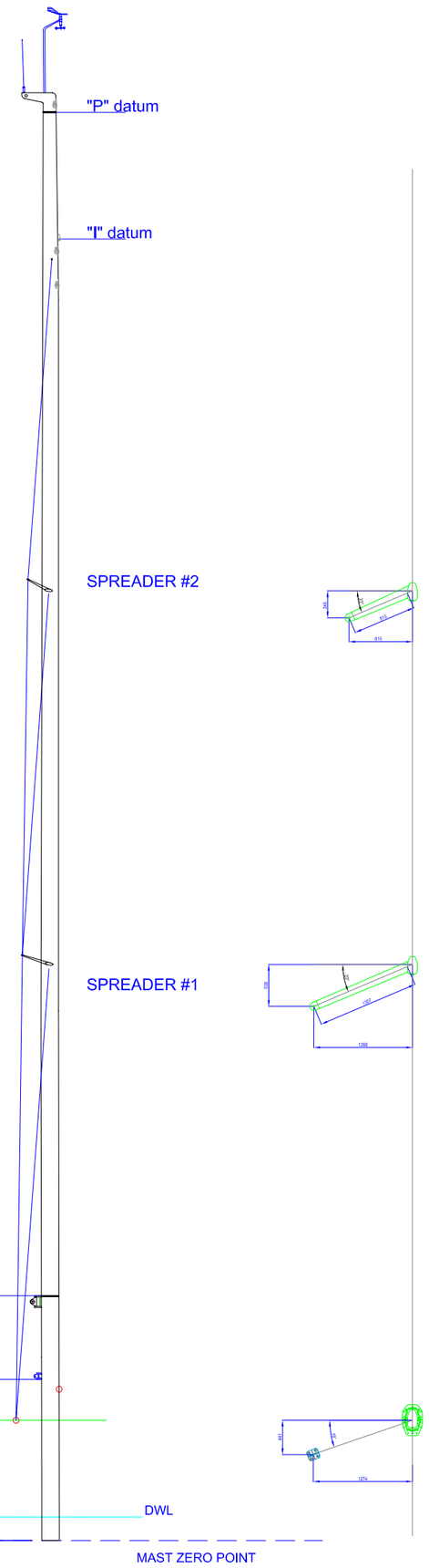


| MAST DATA | | |
|---|---|---|
| RM @ 0° heel | 180,00 | Kgm |
| RM @ 30° heel | 4480 | Kgm |
| MAE | 1,50 | ° |
| SPREADERS SWEEP BACK | 23,00 | ° |
| CHAIN PLATE WIDTH | 1,074 | m |

| MAST MEASURES | |
|---|---|
| IM (above deck) | 15,175 m |
| J | 4,110 m |
| P | 15,200 m |
| E | 5,250 m |
| BAS (Boom above sheet) | 1,600 m |
| BAD (Boom above Deck) | 1,200 m |
| BURY (see note 1) | 1,945 m |

| ROD RIGGING SPECIFICATIONS | MATERIAL | Size | No OFF |
|---|---|---|---|
| V1 | Rod | -12 | 2 |
| V2 | Rod | -12 | 2 |
| | | | |
| | | | |
| D1 | Rod | -12 | 2 |
| D2 | Rod | -10 | 2 |
| D3 | Rod | -12 | 2 |
| | | | |
| T (Forestay) | Rod | -12 | 1 |
| Backstay | Rod | -10 | 1 |

Note 1: the BURY is measured from the mast base to inner skin of the coach roof.

| | DESCRITPION | DESCRIZIONE | MATERIAL | DIAMETER [mm] | LENGHT [m] | No OFF |
|---|---|---|---|---|---|---|
| RACE | Main Halyard | Drizza Randa | SPECTRA | 10 | 41 | 1 |
| | Main Sheet | Scotta Randa | SPECTRA | 10 | 40 | 1 |
| | Main Sheet Traveller | Carrello Randa | POLIESTERE | 8 | 12 | 2 |
| | Genoa Halyard | Drizza Genoa | SPECTRA | 10 | 38 | 1 |
| | T2 (Genoa Sheet) | Scotta Genoa | SPECTRA | 10 | 13 | 2 |
| | | | | | | |
| | Topping Lift (boom up haul) | Amantiglio | POLIESTERE | 8 | 42 | 1 |
| | Reef 1 | Bonina | POLIESTERE | 10 | 18 | 1 |
| | Reef 2 | Bonina | POLIESTERE | 10 | 24 | 1 |
| | Spin. Halyard | Drizza Spinnaker | SPECTRA | 10 | 42 | 2 |
| | Spin. Top Lift | Carica alto Spinnaker | SPECTRA | 8 | 36 | 1 |
| | Spin. Down Pole | Carica basso Spin. | SPECTRA | 6 | 27 | 1 |
| | Spin. Sheets | Scotta Spinnaker | SPECTRA | 8 | 22 | 2 |
| | Spin. Guys | Braccio Spinnaker | SPECTRA | 10 | 16 | 2 |

| MAST SECTION SPARCRAFT | | | | | | |
|---|---|---|---|---|---|---|
| SECTION | dim X/Y (mm) | I XX (cm4) | I YY (cm4) | WEIGHT (Kg/m) | THICKNESS (mm) | SLIDER (mm) |
| F385 | 110X202 | 380 | 1050 | 5,99 | 3,7 | 16 |

mast detail scale 1:2

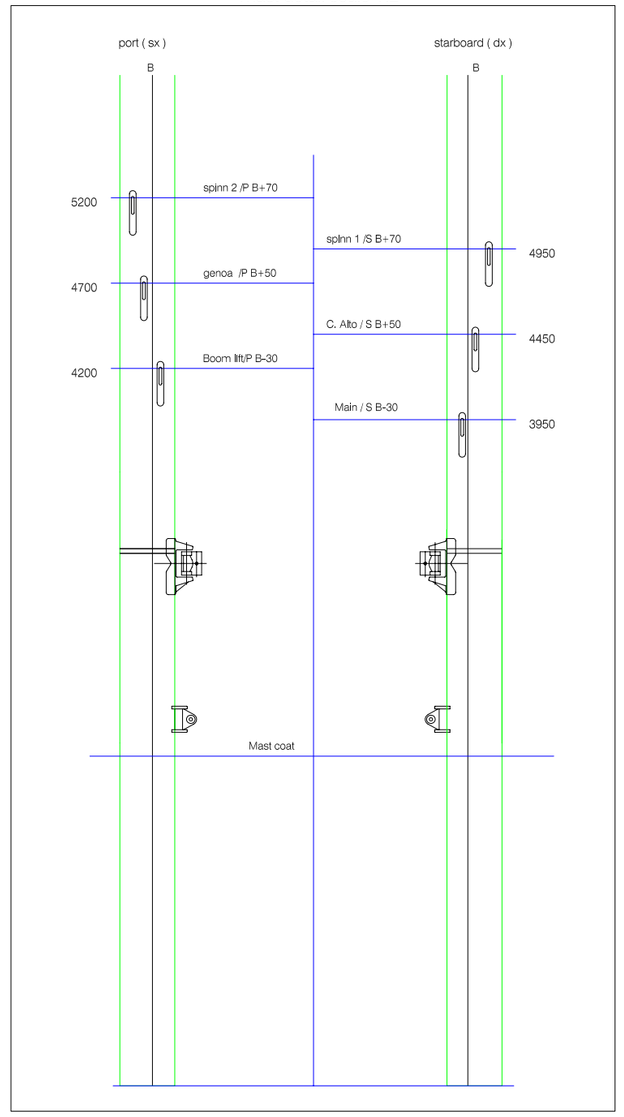


# GRAND SOLEIL 37'
## SPARCRAFT RACE MAST